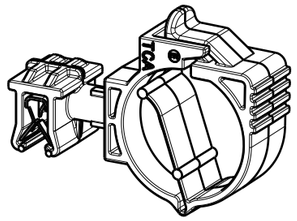

Isometric view
Closed position

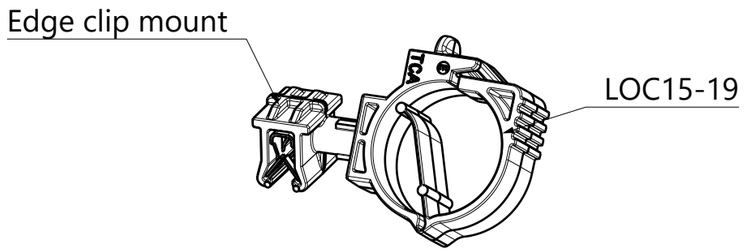

Rotated isometric view
Closed position

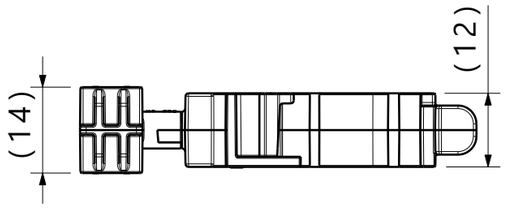

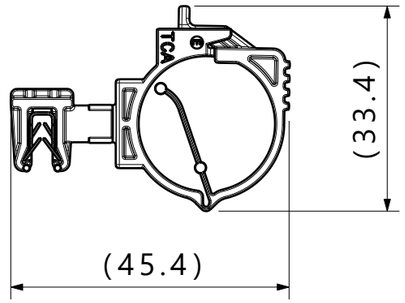

Closed position

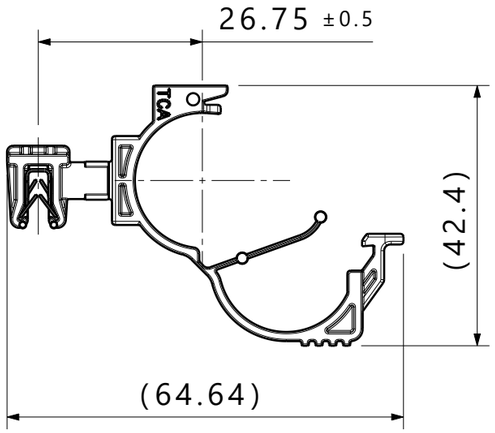

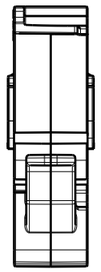

Notes:
1. Clips rotate 360 degrees.
2. Rotational orientation of clips upon delivery is not controlled.

Global Part Description	LOC 10-14			Edge Clip Mount		
	Drawing	Material	Color	Drawing	Material	Color
ECF90LOC15-19-PA66HIRHSUV/PA66HIRHSUVR5-BK	12-0429-051-CSU	PA66HIRHSUV	Black	18-0377-021-CSU	PA66HIRHSUVR5	Black

Revision Level			Revision Record
Drawing	State	Part	ECN 016994
00.2	Design Release		
Changed	Date (YYYY/MM/DD)		
Rohde	2022/05/05		
Approved	Date (YYYY/MM/DD)		
Haftarski	2022/05/05		

All drawing revisions are stored in CAD PDM database

The copyright of this drawing is reserved by HellermannTyton.

Drawn	Date (YYYY/MM/DD)
Rohde	6/17/2020
Approved	Date (YYYY/MM/DD)
Haftarski	2022/05/03

Units: mm

HellermannTyton
www.HellermannTyton.com

Title: 1-3mm edge clip female 90° coupling pin with LOC 15-19

Drawing-No: 19-1732-101-CSU

Scale: 1:1
Global Project Number: 19-1732
Format: A3
Sheet: 1 / 1