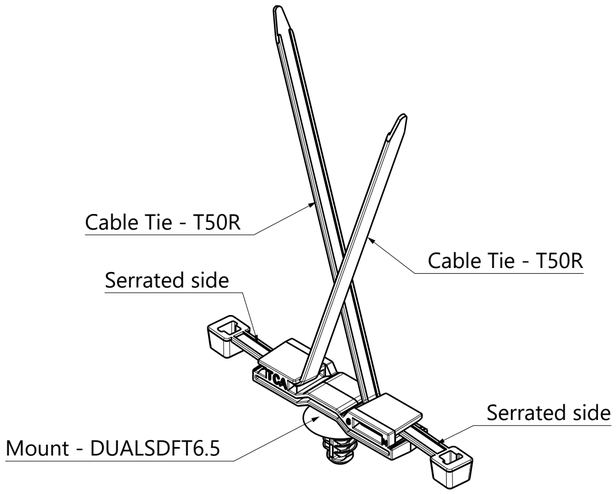

Isometric view
Delivery condition: Assembled set

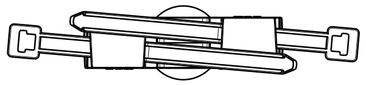

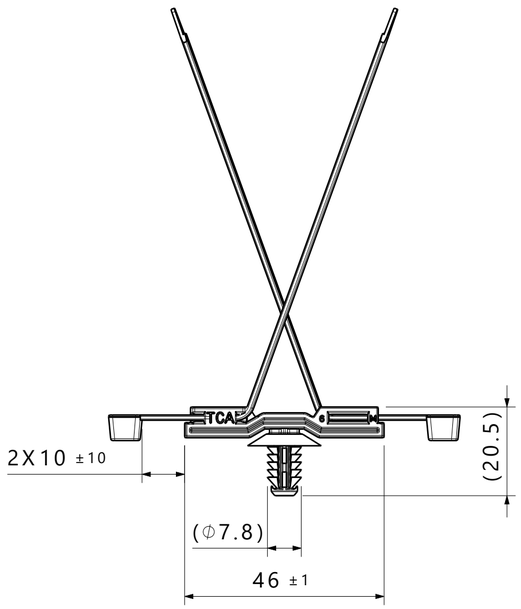

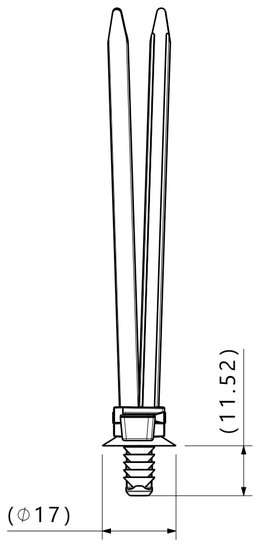

Reference:
1. Tested at the component level
2. Tested at dry as molded

Performance requirements:
1. Fir tree push in force: 45 newtons (10 lbf) max in each applicable nominal oval hole size and a plate thickness of 1.8mm.
2. Fir tree pull out force: 110 newtons (25 lbf) min in each applicable nominal oval hole size and a plate thickness of 1.8mm.
3. Min loop tensile cable tie strength: 225newtons (50lbs)

Notes:
1. Sheet metal thickness range: 0.60mm - 6.00mm
2. Applicable hole size:
   A. 6.5mm +0.5/- 0.4
   B. 6.35mm +/-0.25 Hex

Global Part Description	Bundle Range	Cable ties				Mount		
		Quantity	Drawing	Material	Color	Drawing	Material	Color
T50RX2DUALSDFT6.5A-PA66HIRHS/PA66HIRHSUV-OG/BK	4mm to 50mm	2	CT2050007CST	PA66HIRHS	ORANGE RAL 2003	20-0816-001-CSU	PA66HIRHSUV	Black

Revision Level			Revision Record
Drawing	State	Part	ECN 017364
00.1	Design Release	-	
Changed	Date (YYYY/MM/DD)		
Mehl	2023/03/07		
Approved	Date (YYYY/MM/DD)		
Duncan	2023/03/07		

All drawing revisions are stored in CAD PDM database

The copyright of this drawing is reserved by HellermannTyton.

Drawn	Date (YYYY/MM/DD)
Mehl	2023/03/07
Approved	Date (YYYY/MM/DD)
Duncan	2023/03/07

Units: mm

HellermannTyton
www.HellermannTyton.com

Title: 2 T50R cable ties assembled with DUALSDFT6.5 mount

Drawing-No: 20-0816-111-CSU

Scale: 1:1
Global Project Number: 20-0816
Format: A2
Sheet: 1 / 1